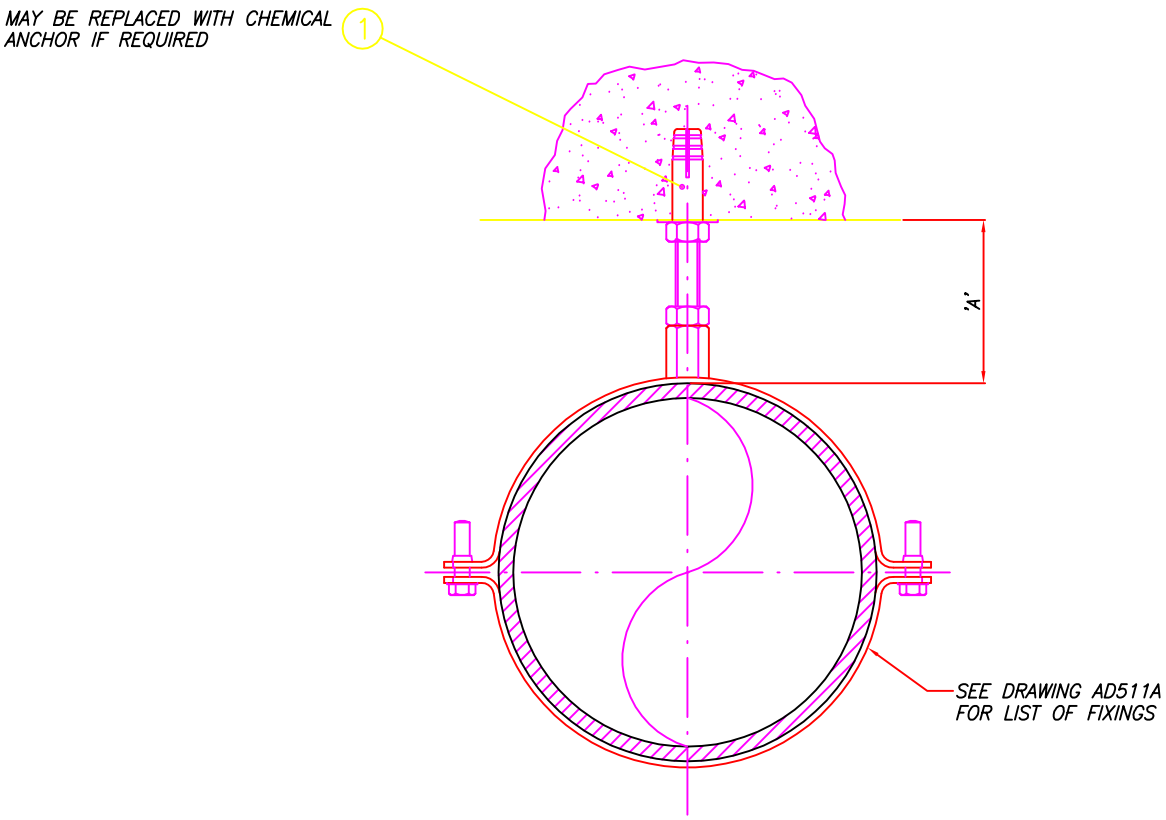

PIPE O/D mm	'A' mm	'B' mm
40	40	900
50	40	900
56	40	900
63	40	900
75	40	900
90	40	900
110	40	1200
125	40	1200
160	40	1500
200	35	1200
250	35	1200
315	40	1200

DIMENSION A: ALL MINIMUM DIMENSIONS
DIMENSION B: MAXIMUM VERTICAL DISTANCE BETWEEN ANCHORS.

THIS DRAWING AND DETAILS CONTAINED WITHIN ARE COPYRIGHT OF HYDROMAX INC. REPRODUCTION OR USE IS PROHIBITED WITHOUT WRITTEN PERMISSION.

Item	Description	Qty	Part No
1	Concrete Anchor	–	–

HYDROMAX

Drawn By	Date
W Jackson	19/08/04
Scale	Rev
n.t.s.	00
Drawing No	
AD511	

Drawing Title

TYPICAL FIXING DETAIL; HDPE DOWNPIPE TO BLOCKWORK (PIPE CLIP)